SONANCE

SURROUND SOUND
HOME THEATER SPEAKER PACKAGE
MAG5.1R

Key Features

Aesthetics

- Elegant, sleek design disappears into any space
- Paintable grille to match surroundings
- Optional square adapter (sold separately)
- The subwoofer's cabinet dimensions have been kept to a minimum to reduce the visual impact in the room

Performance

- Developed using cutting edge design and computer modeling software
- Independently pivoting tweeter allows speakers to be placed where they look the best while directing sound for best performance
- The subwoofer features a high excursion driver for tight well-defined bass response

Installation

- Simplified single-step grille painting process
- Two-piece Roto-Lock® toggle feet delivers a tight fit between the wall or ceiling
- High-strength magnetic grille retention system eliminates gaps and minimizes shadow lines
- The subwoofer's rear-mounted controls provide easy access & the flexibility to adjust the subwoofer as needed

MAG6R (3X)
In-Ceiling
Front Speaker

MAG6R SUR (2X)
In-Ceiling Surround
Sound Speaker

MS8 SUB (1X)
Freestanding Subwoofer

MAG5.1R SURROUND SOUND
Home Theater Speaker Package
MSRP $2,299
BBY SKU 6196627
MDC ITEM # MAG5.1R

SONANCE

Dimensions

MAG6R/MAG6R SUR

Diameter:	9 3/4" (248mm)
Depth:	4 3/4" (121mm)
Cut-Out Diameter:	8 1/4" (210mm)

MS8 SUB

Width:	11 3/16" (284mm)
Height:	15 1/8" (384mm)
Depth:	13 3/8" (340mm)

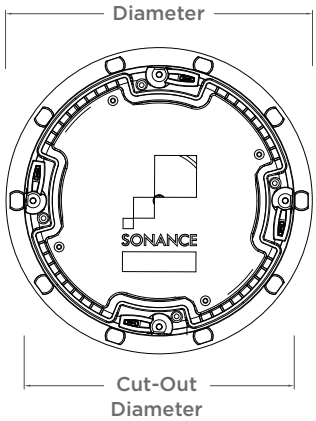

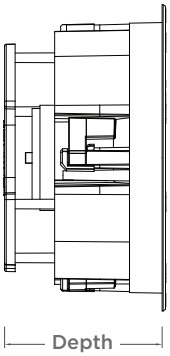

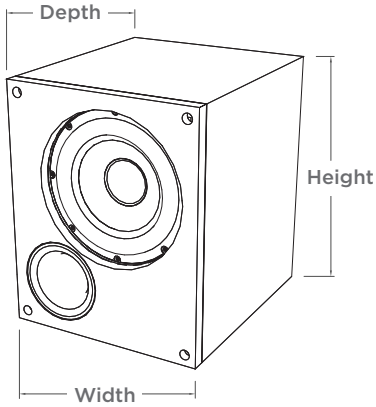

Specifications

MAG6R

Tweeter:	1" (25mm) silk dome, Ferrofluid-cooled, pivoting, in acoustic back chamber
Woofer:	6 1/2" (165mm) glass fiber cone, rubber surround, pivoting
Frequency Response:	45Hz - 20kHz ± 3dB
Impedance:	8 Ohms nominal; 6 Ohms minimum
Power Handling:	5 Watts minimum; 125 Watts maximum
Sensitivity:	89dB SPL (2.83V/1 meter)
Speaker Depth:	4 3/4" (121mm)
Diameter:	9 3/4" (248mm)
Cut-Out Dimensions:	8 1/4" (210mm)
Grille Material:	Perforated steel
Shipping Weight:	3.7 lbs (1.7 kg) each

MAG6R SUR

Tweeter:	Two 1" (25mm) silk dome, Ferrofluid-cooled, pivoting, in acoustic back chamber
Woofer:	6 1/2" (165mm) glass fiber cone, rubber surround, pivoting
Frequency Response:	45Hz - 20kHz ± 3dB
Impedance:	8 Ohms nominal; 6 Ohms minimum
Power Handling:	5 Watts minimum; 125 Watts maximum
Sensitivity:	89dB SPL (2.83V/1 meter)
Speaker Depth:	4 3/4" (121mm)
Diameter:	9 3/4" (248mm)
Cut-Out Dimensions:	8 1/4" (210mm)
Grille Material:	Perforated steel
Shipping Weight:	3.6 lbs (1.6 kg) each

MS8 SUB

Woofer:	8" (203mm) Polypropylene cone with a rubber surround
Frequency Response:	30Hz - 250Hz ± 3dB
Amplifier:	100 Watts
Crossover Frequency:	50Hz - 250Hz (adjustable), 12dB/octave
Inputs:	Line-level LFE input
Dimensions:	11 3/16" x 15 1/8" x 13 3/8"
(WxHxD):	(284mm x 384mm x 340mm)
Adjustments:	Level, Crossover and Phase
Cabinet Finish:	Textured vinyl
Grille Material:	Black cloth
Shipping Weight:	28 lbs (12.7 kg) each

SONANCE

©2020 Sonance. All rights reserved.
Sonance is a registered trademarks of Dana Innovations.

Due to continuous product improvement, all features and specifications are subject to change without notice.
For the latest Sonance product specification information visit our website: www.sonance.com

SONANCE • 991 Calle Amanecer • San Clemente, CA 92673 USA
(949) 492-7777 • FAX: (949) 361-5151 • Technical Support: (949) 492-7777
www.sonance.com

10.13.26